Owner's Guide

Please read this manual before installing or operating this appliance.
This manual must be left with appliance for future reference.

Heat-N-Glo, a division of Hearth Technologies Inc.
20802 Kensington Boulevard, Lakeville, Minnesota 55044
www.heatnglo.com

446-981EFC 8/01

WARNING: IF THE INFORMATION IN THESE INSTRUCTIONS IS NOT FOLLOWED EXACTLY, A FIRE OR EXPLOSION MAY RESULT CAUSING PROPERTY DAMAGE, PERSONAL INJURY, OR DEATH.

- Do not store or use gasoline or other flammable vapors and liquids in the vicinity of this or any other appliance.
- **What to do if you smell gas**
  - Do not try to light any appliance.
  - Do not touch any electrical switch.
  - Do not use any phone in your building.
  - Immediately call your gas supplier from a neighbor's phone. Follow the gas supplier's instructions.
  - If you cannot reach your gas supplier, call the fire department.
- Installation and service must be performed by a qualified installer, service agency, or the gas supplier.

WARNING: IMPROPER INSTALLATION, ADJUSTMENT, ALTERATION, SERVICE OR MAINTENANCE CAN CAUSE INJURY OR PROPERTY DAMAGE. REFER TO THIS MANUAL. FOR ASSISTANCE OR ADDITIONAL INFORMATION CONSULT A QUALIFIED INSTALLER, SERVICE AGENCY, OR THE GAS SUPPLIER.

This appliance is only for use with the type of gas indicated on the rating plate. This appliance is not convertible for use with other gases, unless a certified kit is used.

Printed in U.S.A. Copyright 2001,
Please contact your Heat-N-Glo dealer for any questions or concerns. For the number of your nearest Heat-N-Glo dealer, please call 952-985-6000.

SAFETY AND WARNING INFORMATION

READ and ***UNDERSTAND*** all instructions carefully before starting the appliance. ***FAILURE TO FOLLOW*** these instructions may result in a possible fire hazard and will void the warranty.

Any safety screen or guard removed for servicing must be replaced before operating this appliance.

DO NOT USE this appliance if any part has been under water. Immediately ***CALL*** a qualified service technician to inspect the appliance and to replace any part of the control system and any gas control which has been underwater.

THIS UNIT IS NOT FOR USE WITH SOLID FUEL.

Installation and repair should be ***PERFORMED*** by a qualified service person. The appliance and venting system should be ***INSPECTED*** before initial use and at least annually by a professional service person. More frequent cleaning may be required due to excessive lint from carpeting, bedding material, etc. It is ***IMPERATIVE*** that the unit's control compartment, burners, and circulating air passageways ***BE KEPT CLEAN*** to provide for adequate combustion and ventilation air.

Always ***KEEP*** the appliance clear and free from combustible materials, gasoline, and other flammable vapors and liquids.

NEVER OBSTRUCT the flow of combustion and ventilation air. Keep the front of the appliance ***CLEAR*** of all obstacles and materials for servicing and proper operation.

Due to the high temperature, the appliance should be ***LOCATED*** out of traffic areas and away from furniture and draperies. Clothing or flammable material ***SHOULD NOT BE PLACED*** on or near the appliance.

Children and adults should be **ALERTED** to the hazards of high surface temperature and should **STAY AWAY** to avoid burns or clothing ignition. Young children should be **CAREFULLY SUPERVISED** when they are in the same room as the appliance.

These units ***MUST*** use one of the vent systems described in the Installing Your Fireplace section of the *Installers Guide*. ***NO OTHER*** vent systems or components ***MAY BE USED.***

This gas fireplace and vent assembly ***MUST*** be vented directly to the outside and ***MUST NEVER*** be attached to a chimney serving a separate solid fuel burning appliance. Each gas appliance ***MUST USE*** a separate vent system. Common vent systems are ***PROHIBITED***.

INSPECT the external vent cap on a regular basis to make sure that no debris is interfering with the air flow.

The glass door assembly ***MUST*** be in place and sealed, and the trim door assembly ***MUST*** be in place on the fireplace before the unit can be placed into safe operation.

DO NOT OPERATE this appliance with the glass door removed, cracked, or broken. Replacement of the glass door should be performed by a licensed or qualified service person. ***DO NOT*** strike or slam the glass door.

The glass door assembly ***SHALL ONLY*** be replaced as a complete unit, as supplied by the gas fireplace manufacturer. ***NO SUBSTITUTE*** material may be used.

DO NOT USE abrasive cleaners on the glass door assembly. ***DO NOT ATTEMPT*** to clean the glass door when it is hot.

Turn off the gas before servicing this appliance. It is recommended that a qualified service technician perform an appliance check-up at the beginning of each heating season.

DO NOT place furniture or any other combustible household objects within 36 inches of the fireplace front.

READ THIS MANUAL BEFORE INSTALLING OR OPERATING THIS APPLIANCE. PLEASE RETAIN THIS *OWNER'S GUIDE* FOR FUTURE REFERENCE.

Welcome

Congratulations on selecting a Heat-N-Glo gas fireplace—an elegant and clean alternative to wood burning fireplaces. The Heat-N-Glo gas fireplace you have selected is designed to provide the utmost in safety, reliability, and efficiency.

As the owner of a new fireplace, you'll want to read and carefully follow all of the instructions contained in this *Owners Guide*. We recommend that you pay special attention to the **Safety and Warning Information** section at the beginning of this guide.

This *Owners Guide* should be retained for future reference. We suggest that you keep it with your other important documents and product manuals.

The information contained in this *Owners Guide*, unless noted otherwise, applies to all models and gas control systems.

Your new Heat-N-Glo gas fireplace will give you years of durable use and trouble-free enjoyment. Welcome to the Heat-N-Glo family of fireplace products!

Consumer Reference Information

We recommend that you record the following pertinent information about your fireplace.

Your Fireplace's Model Number _____

Your Fireplace's Serial Number _____

The Date On Which Your Fireplace Was Installed _____

The Type of Gas Your Fireplace Uses _____

Your Dealer's Name _____

NOTES:_____

_____

_____

Table of Contents

Safety and Warning Information 2

Consumer Reference Information 3

Section 1: Preliminaries 5
About Your Warranty 5
Approval Listings and Codes 5
The Gas Control Systems 5

Section 2: Using Your Fireplace 6
General Operating Guidelines 6
Step 1 Viewing the gas controls 6
Step 2 Identifying the type of ignition system 6
Step 3 Checking for gas leaks 7
Step 4 Checking for obstructions blocking vent termination or front grilles 8
Step 5 Checking surrounding household objects and building materials 8
Step 6 Purging air from the gas supply lines 8
Step 7 Preparing to light your fireplace 9
Step 8 Lighting your fireplace 10

Section 3: Maintaining and Servicing Your Fireplace 15
Fireplace Maintenance 15
Glass Assembly Care and Installation 17

Section 4: Troubleshooting 21
Standing Pilot Troubleshooting 21
DSI Troubleshooting 24
IPI Troubleshooting 25

Section 5: Your Fireplace's Wiring 27
If Your Fireplace Has Standing Pilot Ignition 27
If Your Fireplace Has Direct Spark Ignition 28
If Your Fireplace Has Intermittent Pilot Ignition .. 29
Fan Wiring Diagram 30

Section 6: Replacement Parts and Accessories 30

1

Preliminaries

About Your Warranty

Failure to follow all of these instructions will void your Warranty and may present a fire hazard. Therefore, please be sure to read and carefully follow all of the instructions contained in this guide. Any component that is found to be faulty **must be** replaced with an approved component. Tampering with the fireplace components is DANGEROUS and voids all warranties.
The Heat-N-Glo Warranty will be voided by, and Heat-N-Glo disclaims any responsibility for, the following actions:

- Installation of any damaged fireplace or vent system component.
- Modification of the fireplace or direct vent system.
- Installation other than as instructed by Heat-N-Glo.
- Improper positioning of the gas logs or the glass door.
- Installation and/or use of any component part not manufactured and approved by Heat-N-Glo, not withstanding any independent testing laboratory or other party approval of such component part or accessory.

Approval Listings and Codes

Appliance Certification

The Heat-N-Glo gas fireplaces discussed in this *Owners Guide* have been tested to certification standards and listed by the applicable laboratories. See the *Installers Guide* and Rating Plate for your fireplace.

Installation Codes

The installation must conform with local codes or, in the absence of local codes, with the National Fuel Gas Code ANSI Z223.1 (in the United States) or CAN/CGA-B149 Installation Codes (in Canada). The appliance, when installed, must be electrically grounded in accordance with local codes or, in the absence of local codes with the National Electric Code ANSI/NFPA 70 (in the United States) or the Canadian Electric Code CSA C22.1(in Canada).

The Gas Control Systems

⚠ **WARNING: THIS UNIT IS NOT FOR USE WITH SOLID FUEL.**

Three types of gas control systems are used with these models: Standing Pilot Ignition, Direct Spark Ignition and Intermittent Pilot Ignition.

- **Standing Pilot Ignition System**
  This system includes millivolt control valve, standing pilot, thermopile/thermocouple flame sensor, and piezo ignitor.

⚠ **WARNING: 110-120 VAC MUST NEVER BE CONNECTED TO A CONTROL VALVE IN A MILLIVOLT SYSTEM.**

- **Direct Spark Ignition (DSI) System**
  This system includes a 110V control valve, electronic module and spark ignitor/flame sensor.
- **Intermittent Pilot Ignition (IPI) System**
  This system includes a 3V transformer, 3V electronic module, 3V control valve, intermittent sparking pilot, and battery back-up.

⚠ **WARNING: CONTINUOUS 110-120 VAC SERVICE MUST BE WIRED DIRECTLY TO THE FIREPLACE JUNCTION BOX IN AN IPI OR DSI SYSTEM.**

2

Using Your Fireplace

General Operating Guidelines

Read these operating instructions very carefully **before** lighting your fireplace. Be sure to review all of the safety warnings and cautions in the **Safety and Warning Information** section at the beginning of this *Owners Guide.*

Step 1 Viewing the gas controls of your fireplace

To view the gas controls of your fireplace:

1. Open the lower grille or remove the trim doors as shown.
2. The area inside is called the controls compartment.

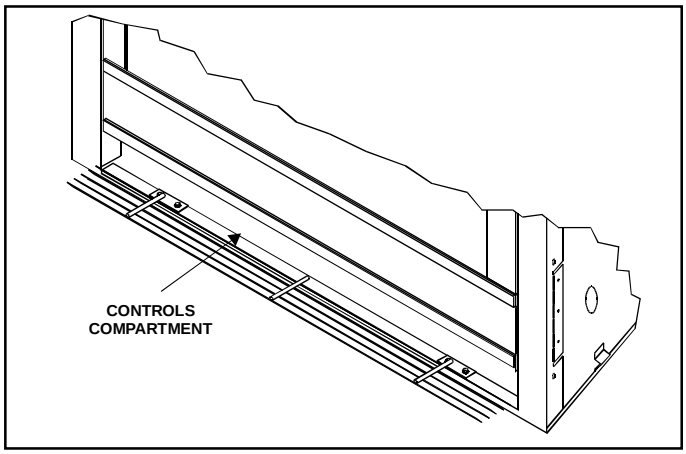

Figure 1. The Controls Compartment

Step 2 Identifying the type of ignition system

Here's how to identify a Standing Pilot Ignition system.

- If your fireplace's gas controls have a red push button piezo ignitor, you have a Standing Pilot Ignition system.

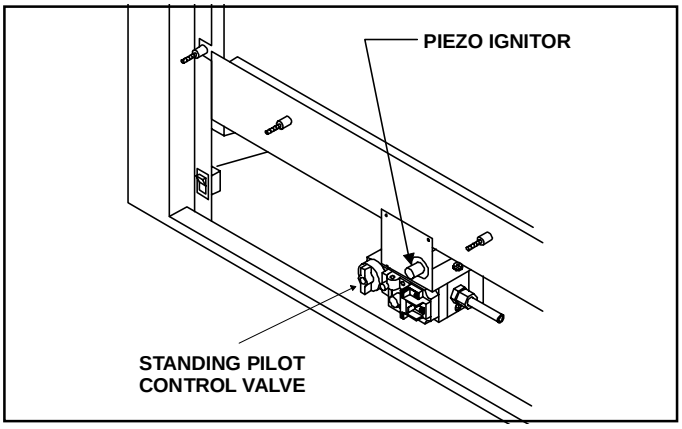

Figure 2. Standing Pilot Ignition

Here's how to identify a Direct Spark Ignition (DSI) system:

- If your fireplace's gas controls do not have a push button, you have a Direct Spark Ignition (DSI) system.

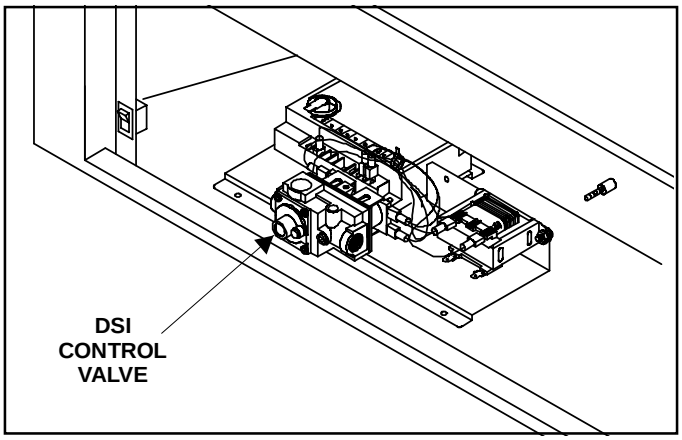

Figure 3. Direct Spark Ignition

Here's how to identify an Intermittent Pilot Ignition (IPI) system:

- If your fireplace's gas controls resemble Figure 4 with green and orange color-coded electrical leads (2 contact points) you have an Intermittent Pilot Ignition (IPI) system.

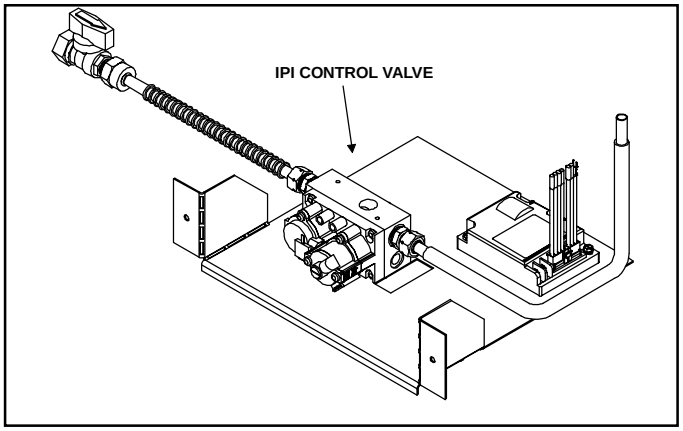

Figure 4. Intermittent Pilot Ignition

Step 3 Checking for gas leaks

Before lighting your fireplace, read the warning below and double-check your unit for possible gas leaks. If you are unsure, turn off the gas to your fireplace, and call a service technician or your gas utility. **Do not use a flame to check for gas leaks.**

LPG (PROPANE) GAS WARNING

The following WARNING applies to installations using LP (Propane) gas.

WARNING: TO AVOID POSSIBLE INJURY, FIRE, AND EXPLOSION, PLEASE READ AND FOLLOW ALL INSTRUCTIONS ON THIS APPLIANCE BEFORE LIGHTING THE PILOT. THIS APPLIANCE USES LP (PROPANE) GAS, WHICH IS HEAVIER THAN AIR AND WILL REMAIN AT FLOOR LEVEL IF THERE IS A LEAK.

BEFORE LIGHTING, SMELL AT FLOOR LEVEL AND/OR USE OTHER MEANS (SUCH AS USING A SOAP SOLUTION ON ALL PIPING AND CONNECTIONS, USING A GAS DETECTOR, ETC.) TO CHECK FOR GAS LEAKS.

NOTE: LP (PROPANE) GAS CAN BECOME ODORLESS AND CANNOT ALWAYS BE DETECTED BY SMELL. IF YOU SMELL GAS, DETECT A GAS LEAK, OR SUSPECT THAT A GAS LEAK EXISTS, FOLLOW THE RULES SHOWN BELOW:

1. **Evacuate all people from your building.**
2. **DO NOT light matches.**
   DO NOT turn electric lights or switches on or off in the area.
   DO NOT use an electric fan to remove gas from the area.
   DO NOT use a telephone inside the building.
3. **Shut off the gas at the LP tank outside of your building.**
4. **Telephone the gas company and the fire department. Ask for instructions. Before hanging up, give your name, address, and telephone number. DO NOT go back into your building.**

If your LP tank runs out of fuel, turn off the gas at the appliance. After the LP gas tank is refilled, the appliance must be re-lit according to the manufacturer's instructions. If the gas control has been exposed to WATER in any way, DO NOT try to use it. It must be replaced. DO NOT attempt to repair the gas control or the appliance.

Step 4 Checking for obstructions blocking vent termination or front grilles

Before lighting your fireplace, double-check your unit for possible obstructions that could be blocking the vent termination or the front grilles of your fireplace.

Before lighting the fireplace, double-check that furniture and other combustible household objects are NOT located within 36 inches of the fireplace front.

⚠ WARNING: Children and adults should be alerted to the hazards of high surface temperature and should stay away to avoid burns or clothing ignition. Young children should be carefully supervised when they are in the same room as the appliance.

Step 5 Checking surrounding household objects and building materials

The building materials placed within 18 inches of the TOP and FRONT of the fireplace (such as walls and mantels) must be able to withstand temperatures of 117^0 F plus room temperature.

⚠ WARNING: Odors and damage to surrounding building materials may become noticeable if installation materials are not suitable for temperatures immediately surrounding the fireplace.

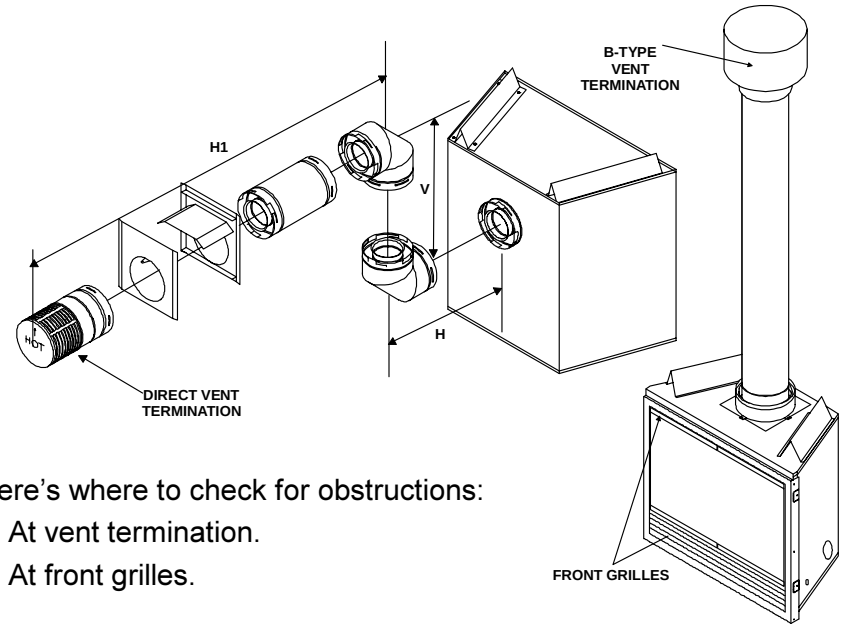

Here's where to check for obstructions:

1. At vent termination.
2. At front grilles.

Figure 5. Vent Termination and Front Grilles

Step 6 Purging air from the gas supply lines

If the gas valve has been in the OFF position, a small amount of air will be in the gas supply lines. When first lighting your fireplace, it will take a few minutes for the lines to purge themselves of this air. Once the purging is complete, your fireplace will light and will operate normally.

Subsequent lightings of your fireplace will not require this purging of air from the gas supply lines, **unless the gas valve has been turned to the OFF position**, in which case the air would have to be purged from the gas supply lines.

Step 7 Preparing to light your fireplace

Previously, in Step 2, you identified your fireplace's type of ignition system—either Standing Pilot Ignition, Direct Spark Ignition (DSI) or Intermittent Pilot Ignition (IPI). Shown below are safety instructions specific to your fireplace's ignition system. Read the instructions very carefully before lighting your fireplace.

FOR YOUR SAFETY READ BEFORE LIGHTING

WARNING: IF YOU DO NOT FOLLOW THESE INSTRUCTIONS EXACTLY, A FIRE OR EXPLOSION MAY RESULT CAUSING PROPERTY DAMAGE, PERSONAL INJURY, OR LOSS OF LIFE.

STANDING PILOT IGNITION

A. This appliance (standing pilot version) has a pilot that must be lighted by hand. When lighting the pilot, follow these instructions exactly.

B. BEFORE LIGHTING smell all around the appliance area for gas. Be sure to smell next to the floor because some gas is heavier than air and will settle to the floor.

WHAT TO DO IF YOU SMELL GAS

- Do not try to light any appliance.
- Do not touch any electric switch; do not use any phone in your building.
- Immediately call your gas supplier from a neighbor's phone. Follow the gas supplier's instructions.
- If you cannot reach your gas supplier, call the fire department.

C. Use only your hand to push in or turn the gas control knob. Never use tools. If the knob will not push in or turn by hand, don't try to repair it, call a qualified service technician. Force or attempted repair may result in a fire or explosion.

D. Do not use this appliance if any part has been under water. Immediately call a qualified service technician to inspect the appliance and to replace any part of the control system and any gas control which has been under water.

DSI IGNITION

A. This appliance (DSI version) does not have a pilot. It is equipped with an ignition device that automatically lights the burner. Do <u>not</u> try to light the burner by hand.

B. BEFORE OPERATING smell all around the appliance area for gas. Be sure to smell next to the floor because some gas is heavier than air and will settle to the floor.

WHAT TO DO IF YOU SMELL GAS

- Do not try to light any appliance.
- Do not touch any electric switch; do not use any phone in your building.
- Immediately call your gas supplier from a neighbor's phone. Follow the gas supplier's instructions.
- If you cannot reach your gas supplier, call the fire department.

C. Do not use this appliance if any part has been under water. Immediately call a qualified service technician to inspect the appliance and to replace any part of the control system and any gas control which has been under water.

IPI IGNITION

A. This appliance is equipped with an intermittent pilot ignition (IPI) device which automatically lights the burner. Do not try to light the burner by hand.

B. BEFORE OPERATING smell all around the appliance area for gas. Be sure to smell next to the floor because some gas is heavier than air and will settle to the floor.

WHAT TO DO IF YOU SMELL GAS

- Do not try to light any appliance.
- Do not touch any electric switch; do not use any phone in your building.
- Immediately call your gas supplier from a neighbor's phone. Follow the gas supplier's instructions.
- If you cannot reach your gas supplier, call the fire department.

C. Do not use this appliance if any part has been under water. Immediately call a qualified service technician to inspect the appliance and to replace any part of the control system and any gas control which has been under water.

Step 8 Lighting your fireplace

Standing Pilot Fireplaces

Be sure to read and follow all safety information shown on the previous page and elsewhere in this *Owners Guide*. And be sure to read and follow all safety and lighting instructions found in the controls compartment of your fireplace. A picture of this is shown in Figure 1.

The drawing below shows the position of the gas valve control and the pressure regulator knob on various standing pilot control valve models.

To increase or decrease the burner flame height:
Rotate the pressure regulator knob clockwise to HI to increase the flame height and counterclockwise to LO to decrease the flame height.

To turn the burner flame on or off:
Use the fireplace ON/OFF rocker switch, wall switch, or remote control kit.

For Optimum Efficiency:
Turn the control valve to **"OFF"** when the appliance is not in operation.

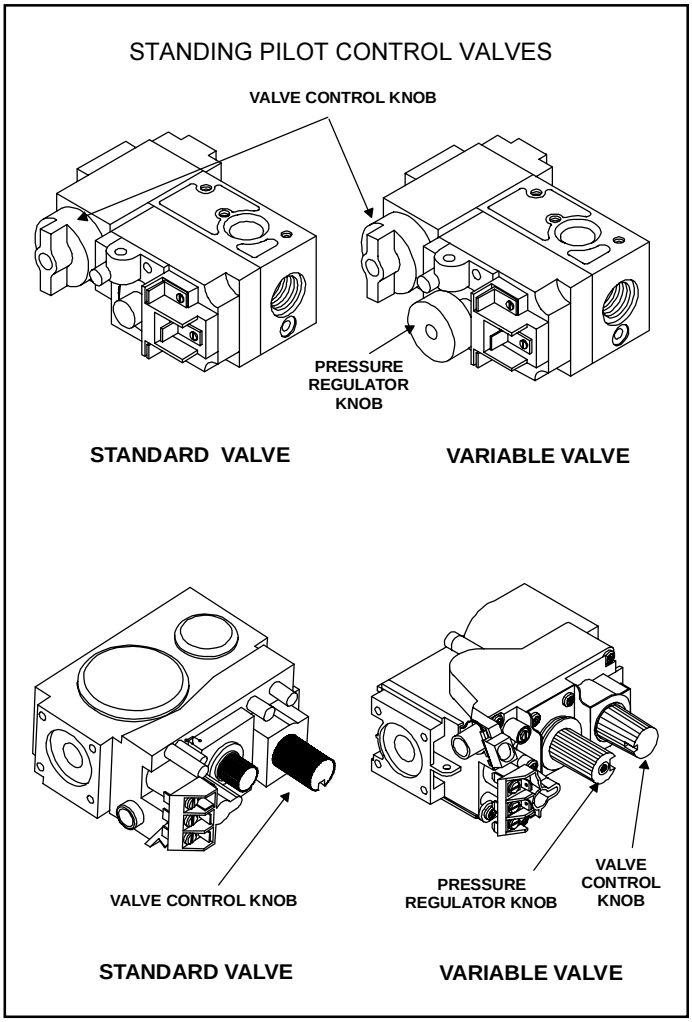

Figure 6. Gas Valve Control and Pressure Regulator Knob

CAUTION

DURING THE INITIAL PURGING AND SUBSEQUENT LIGHTINGS OF YOUR FIREPLACE, NEVER ALLOW THE GAS VALVE CONTROL KNOB TO REMAIN DEPRESSED IN THE PILOT POSITION WITHOUT PUSHING THE RED IGNITOR BUTTON AT LEAST ONCE EVERY SECOND.

Lighting Your Standing Pilot Ignition Fireplace

If you have read and understand all of the safety instructions in this *Owners Guide*, you're ready to light your standing pilot ignition fireplace. If you have read and **do not** understand them, contact your dealer or qualified service technician before attempting to light your fireplace. Be sure to follow these lighting instructions exactly.

LIGHTING INSTRUCTIONS

STANDING PILOT CONTROLS

1. **"STOP!"** Read the safety information on page 9 first!
2. To access controls, open the lower grille.
3. Turn the gas control valve knob to the OFF position. To do this, you must turn the knob clockwise to the PILOT position, and then press in and continue turning clockwise to the OFF position.

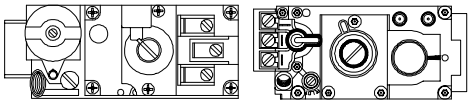

GAS CONTROL VALVE MODELS

NOTE: Knob cannot be turned from "PILOT" to "OFF" unless knob is pushed in slightly. Do not force.

4. WAIT AT LEAST FIVE (5) MINUTES TO CLEAR OUT ANY GAS. If you have unsuccessfully tried to light the fireplace, wait longer, especially if you are using LP gas. Then smell for gas, including near the floor. If you then smell gas, **STOP!** Follow "B" in the safety information on page 6. If you don't smell gas, go to the next step.
5. The pilot should not require accessing for lighting purposes. The pilot is located inside the combustion chamber. If it is necessary to access the pilot, remove the trim door and glass door.

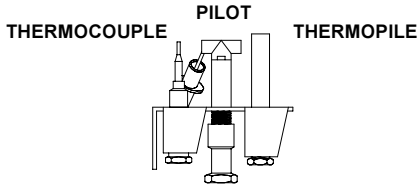

6. To put the control in the PILOT position, turn the control knob counter-clockwise to the PILOT position.
7. To light the pilot press the control knob and then press the red piezo button once every second. The piezo makes a clicking sound. It may be necessary to repeat this step. If the pilot does not light after 10 seconds, go back to step 3. The control knob should be held down for a MINUTE after pilot ignition.
   - If the control knob does not pop out when released, **STOP!** Shut off the gas supply to the fireplace control valve, and **IMMEDIATELY** call your service technician or gas supplier.
   - If the pilot will not stay lit after two tries, turn the control knob to the "OFF" position and call your service technician or gas supplier.
8. After the pilot has been lit, the burner can be turned on by turning the knob counter-clockwise to the "ON" position.
9. Set the ON/OFF switch to the "ON" position.
10. Close the lower grille.

TO TURN OFF GAS APPLIANCE

1. Open the lower grille.
2. Set ON/OFF switch to "OFF".
3. Turn the valve control knob clockwise to the "Pilot" position, then depress knob and continue turning to "OFF" position.
4. Close the lower grille.

When you light your fireplace, you may notice:

- This gas appliance produces heat which does have an associated odor or smell. If you feel this odor is excessive it may require the initial 3-4 hour continuous burn on high followed by a second burn up to 12 hours to fully drive off any odor from paint and lubricants used in the manufacturing process. (See Cleaning Glass Assembly section for further information.) Additionally, for the first few minutes after each lighting, vapor may condense and fog the glass and flames may be blue. After a few minutes this moisture will disappear and within 15-30 minutes the flames should become yellow.
- Noise caused by metal expanding and contracting as it heats up and cools down, similar to the sound produced by a furnace or heating duct. This noise does not affect the operation or longevity of your fireplace.

Direct Spark Ignition (DSI) Fireplaces

Be sure to read and follow all safety information found on page 9 and elsewhere in this *Owners Guide*. And be sure to read and follow all safety and lighting instructions found on the labels in the controls compartment of your fireplace. A picture of this is shown in Figure 1 .

The drawing below shows you the position of the control valve. It also shows where to turn the fireplace burner flame on and off.

During the heating season:
Turn the fireplace ON/OFF rocker switch to the ON position. This causes the ignitor to spark and light the burner. Turn the ON/OFF rocker switch to the OFF position and the burner will extinguish.

During the off season:
When the heating season is over, turn the ON/OFF switch to the OFF position. The system will be shut down.

To turn the burner flame on or off:
Use the fireplace ON/OFF rocker switch, wall switch, or remote control kit.

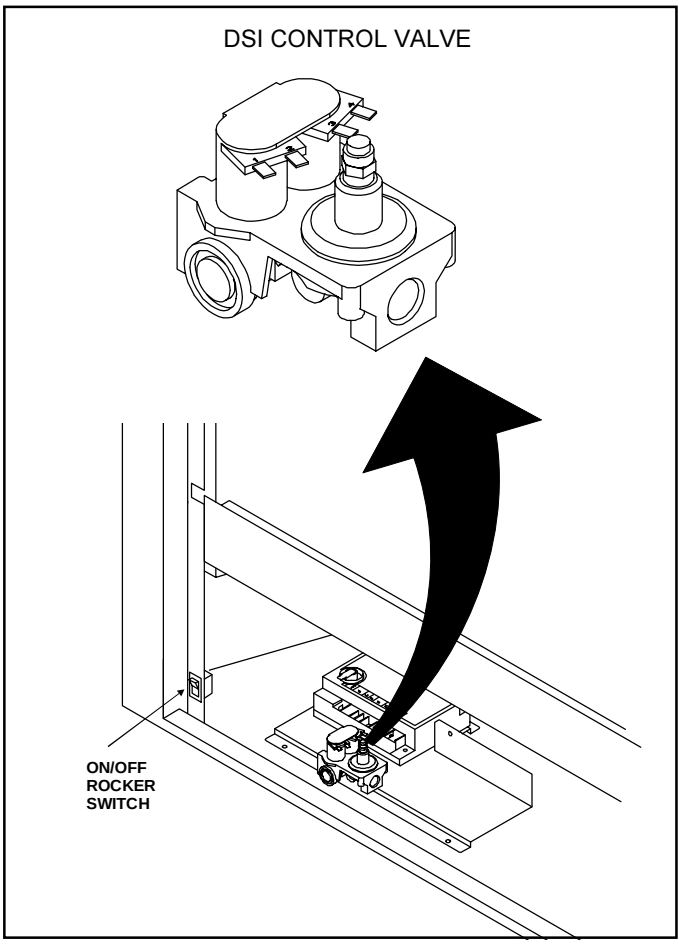

Figure 7. The DSI Control Valve and On/Off Rocker Switch

Lighting Your Direct Spark Ignition Fireplace

If you have read and understand all of the safety instructions in this *Owners Guide*, you're ready to light your direct spark ignition fireplace. If you have read and **do not** understand them, contact your dealer or qualified service technician before attempting to light your fireplace. Be sure to follow these lighting instructions exactly.

OPERATING INSTRUCTIONS
DSI CONTROLS

1. **STOP!** Read the safety information on page 9 first!
2. Turn off all electric power to the appliance.
3. This appliance is equipped with an ignition device which automatically lights the burner. Do not try to light the burner by hand.

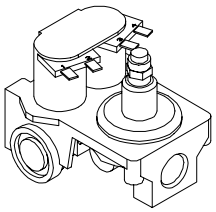

GAS VALVE

4. WAIT AT LEAST FIVE (5) MINUTES TO CLEAR OUT ANY GAS. If you have unsuccessfully tried to light the fireplace, wait longer, especially if you are using LP gas. Then smell for gas, including near the floor. If you then smell gas, STOP! Follow "B" in the safety information located on the previous pages. If you don't smell gas, go to next step.
5. Turn on all electric power to the appliance.
6. Open the lower grille.
7. Turn ON/OFF rocker switch to "ON".
8. If the appliance will not operate, turn off the gas as instructed below and call your service technician or gas supplier.

TO TURN OFF GAS TO APPLIANCE

1. Open the lower grille.
2. Turn ON/OFF switch to "OFF".
3. Turn off all electric power to the appliance if service is to be performed.

When you light your fireplace for the first time, you may notice:

- This gas appliance produces heat which does have an associated odor or smell. If you feel this odor is excessive it may require the initial 3-4 hour continuous burn on high followed by a second baurn of up to 12 hours to fully drive off any odor from paint and lubricants used in the manufacturing process. (See Cleaning Glass Assembly section for further information.) Additionally, for the first few minutes after each lighting, vapor may condense and fog the glass and flames may be blue. After a few minutes this moisture will disappear and within 15-30 minutes the flames should become yellow.
- Noise caused by metal expanding and contracting as it heats up and cools down, similar to the sound produced by a furnace or heating duct. This noise does not affect the operation or longevity of your fireplace.
- A Red Light. The **DSI** Module of this fireplace is equipped with a **Red** indicator light which functions as follows:

Red Light		Fault Condition
1. Slow Flash	=	Normal operation, no call for heat.
2. Fast Flash	=	Normal operation, call for heat.
3. Two Flashes	=	5 minute trial lockout, on/off reset required.
4. Steady On	=	Hard lockout control, failure.

Do not attempt to service or repair the equipment yourself - Turn the ON/OFF switch to "OFF" and call a qualified service technician.

Intermittent Pilot Ignition (IPI) Fireplaces

Be sure to read and follow all safety information found on page 9 and elsewhere in this *Owners Guide*. And be sure to read and follow all safety and lighting instructions found on the labels in the controls compartment of your fireplace. A picture of this is shown in Figure 1.

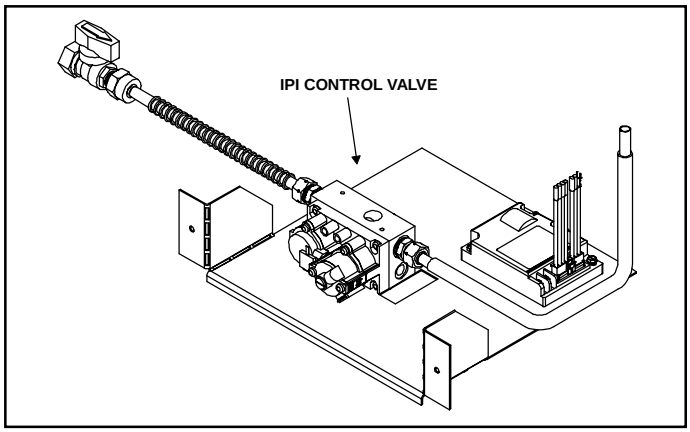

Figure 8. Intermittent Pilot Ignition

Lighting Your Intermittent Pilot Ignition Fireplace

If you have read and understand all of the safety instructions in this *Owners Guide*, you're ready to light your intermittent pilot ignition fireplace. If you have read and **do not** understand them, contact your dealer or qualified service technician before attempting to light your fireplace. Be sure to follow these lighting instructions exactly.

LIGHTING INSTRUCTIONS (IPI)

1. **STOP!** Read the safety information on page 9 first!
2. Turn off all electric power to the appliance.
3. This appliance is equipped with an ignition device which automatically lights the burner. Do not try to light the burner by hand.

GAS VALVE

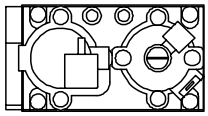

4. Wait five (5) minutes to clear out any gas. Then smell for gas, including near the floor. If you smell gas, STOP! Follow "B" in the Safety Information located on the previous pages. If you don't smell gas, go to next step.
5. Turn on all electric power to the appliance.
6. To light the burner, flip the ON/OFF switch to the "ON" position. (The ON/OFF switch may include a wall switch if so equipped).
7. If the appliance will not operate, follow the instructions "To Turn Off Gas to Appliance" and call your service technician or gas supplier.

TO TURN OFF GAS TO APPLIANCE

1. Turn off all electric power to the appliance if service is to be performed.
2. Flip ON/OFF switch to the "OFF" position.

When you light your fireplace for the first time, you may notice:

- This gas appliance produces heat which does have an associated odor or smell. If you feel this odor is excessive it may require the initial 3-4 hour continuous burn on high followed by a second baurn of up to 12 hours to fully drive off any odor from paint and lubricants used in the manufacturing process. (See Cleaning Glass Assembly section for further information.) Additionally, for the first few minutes after each lighting, vapor may condense and fog the glass and flames may be blue. After a few minutes this moisture will disappear and within 15-30 minutes the flames should become yellow.
- Noise caused by metal expanding and contracting as it heats up and cools down, similar to the sound produced by a furnace or heating duct. This noise does not affect the operation or longevity of your fireplace.

Fireplace Maintenance

Although the frequency of your fireplace servicing and maintenance will depend on use and the type of installation, you should have a qualified service technician perform an appliance check-up at the beginning of each heating season. See the table below for specific guidelines regarding each fireplace maintenance task.

IMPORTANT *TURN OFF THE GAS BEFORE SERVICING YOUR FIREPLACE.*

Type of Fireplace Maintenance	Frequency	By	Fireplace Maintenance Task To Be Completed
Replacing Old Ember Material	Once annually, during the annual check-up	Qualified Service Technician	Brush away loose ember material near the burner. Replace old ember material. Save the remaining ember material and repeat this procedure at your next servicing. For more information, see **Placing Ember Material** in the **INSTALLERS GUIDE.**
Cleaning Burner & Controls	Once annually	Qualified Service Technician	Brush or vacuum the control compartment, fireplace logs, and burner areas surrounding the logs.
Checking Flame Patterns, Flame Height	Periodically	Qualified Service Technician/ Owner	Make a visual check of your fireplace's flame patterns. Make sure the flames are steady—not lifting or floating. See the picture in Figure 9. The flame sensor or thermopile/thermocouple tips should be covered with flame. See the picture in Figure 10.
Checking Vent System	Before initial use and at least annually thereafter, more frequently if possible	Qualified Service Technician/ Owner	Inspect the external vent cap on a regular basis to ensure that no debris is interfering with the flow of air. Inspect entire venting system to ensure proper function.
Cleaning Glass Door	After first 3-4 hours of use. As necessary after initial cleaning.	Homeowner	Remove and clean glass after the first 3 to 4 hours of use. After the initial cleaning, clean as necessary, particularly after adding new ember (flame colorant) material. Film deposits on the inside of the glass door should be cleaned off using a household glass cleaner. **NOTE: DO NOT handle or attempt to clean the door when it is hot and Do NOT use abrasive cleaners. NOTE: If the glass breaks, carefully remove the glass frame assembly and vacuum any loose pieces with a shop vac (do NOT vacuum if pieces are hot). Replace only with glass specified for use with your fireplace. Contact your dealer. See Glass Assembly Installation section.**

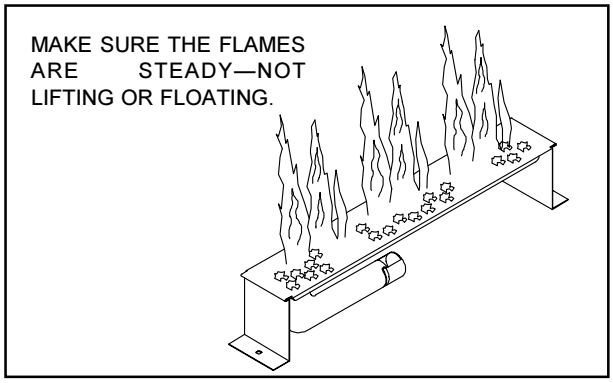

Figure 9. Burner Flame Patterns

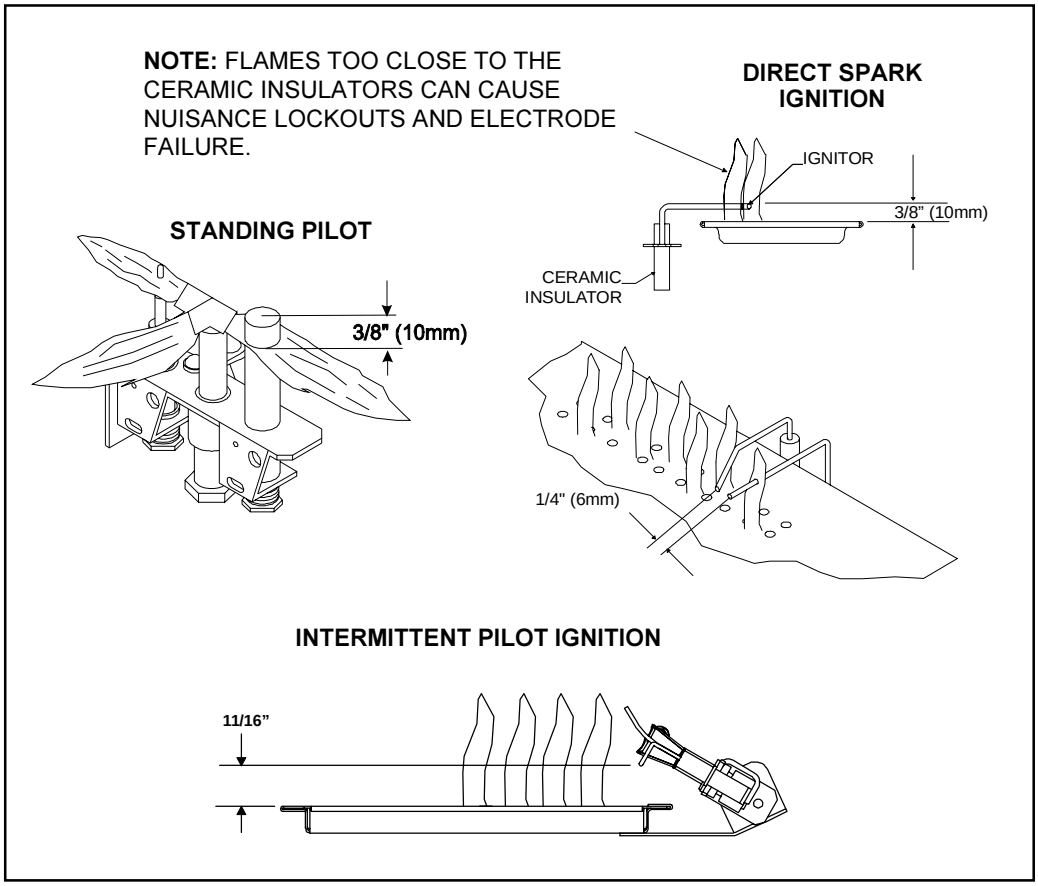

Figure 10. Pilot/Ignitor Flame Patterns

Glass Assembly Care and Installation

The Heat-N-Glo fireplaces have various glass assembly designs. Some of the glass assembly designs incorporate one or more of the following basic designs. Choose the basic design used on your fireplace from the following diagrams and follow the accompanying instructions.

The initial burn of the gas fireplace should be for approximately 3 to 4 hours. During this time there may be a slight odor and also a light film may accumulate on the inside of the glass. This odor and film are simply part of the paint, logs and ember materials curing process.

Following this initial burn, turn off the fireplace and allow the glass to cool completely. Remove the glass using the appropriate removal instructions. Clean the glass with any common household glass cleaner and soft cloth. Cleaning the glass after the initial 3 to 4 hour burn will prevent the film from becoming baked on to the glass. After this initial cleaning it should only be necessary to clean the glass occasionally as required.

NEVER SCRAPE OR RUB GLASS WITH ANY ABRASIVE MATERIALS OR CLEANERS.

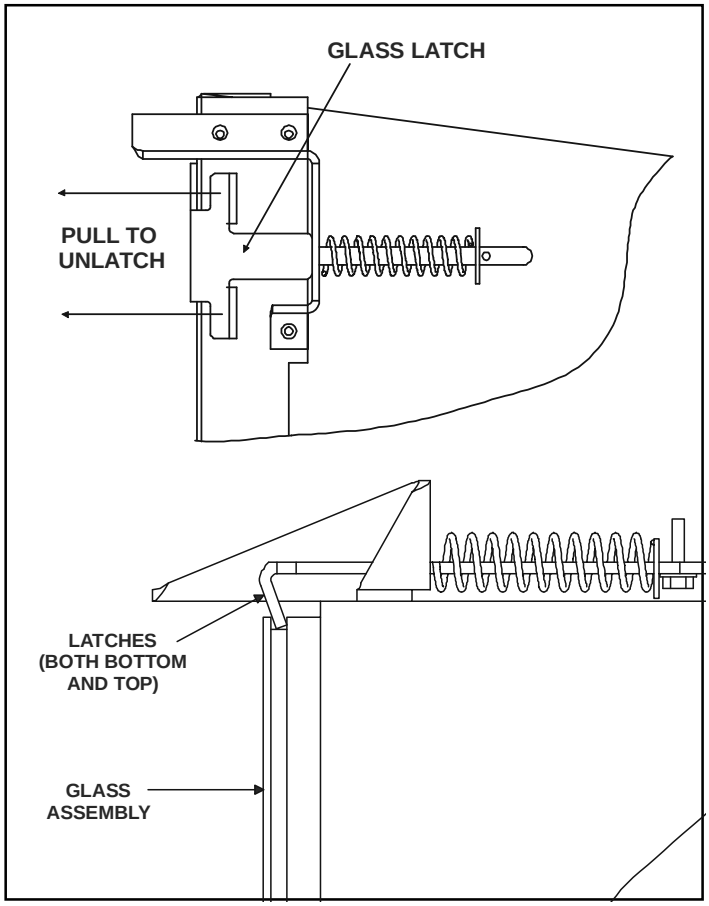

Figure 11. Glass Assembly

Remove any louvers, doors or decorative panels to access the glass latches. Pull the glass latches out of the groove on the glass frame by pulling them towards you. After replacement, reinstall glass latches, making sure the latch is seated firmly in the glass frame slot. Reinstall any trim door or louvers.

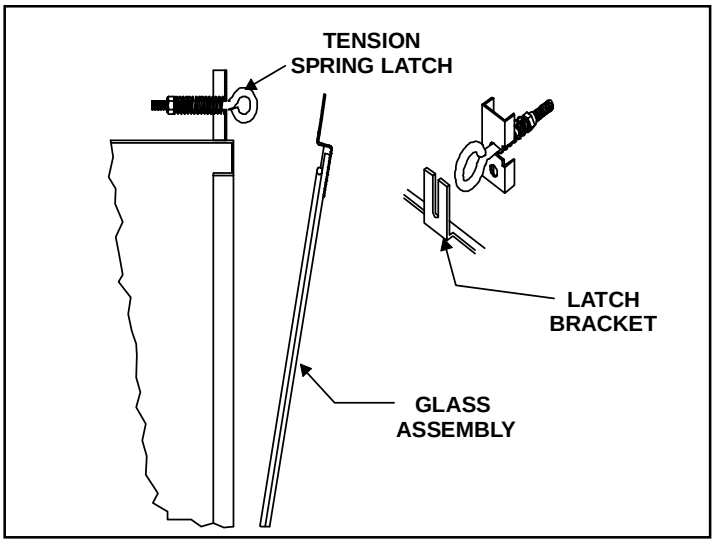

Figure 12. Glass Assembly

Remove trim doors, louvers or decorative panels. Pull out and rotate the spring bolts ¼ turn to remove them from the mounting brackets and carefully pull top of glass towards you.

⚠ WARNING: PULLING GLASS TOO FAR AWAY FROM FIREPLACE WITHOUT FIRST LIFTING IT OUT OF THE BOTTOM BRACKET WILL DAMAGE THE BOTTOM BRACKET.

After replacement, latch the tension spring bolt into the latch bracket and turn the spring bolt ¼ turn. ENSURE THAT THE SPRING BOLTS ARE SECURELY LATCHED. Reinstall any trim door or louvers.

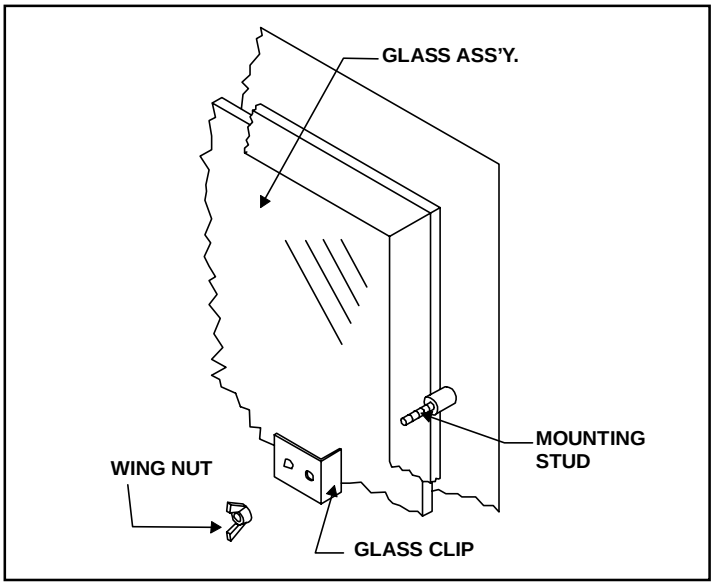

Figure 13. Glass Assembly

Remove wing nuts and glass clips. After replacement, re-install the glass clips and wing nuts over the mounting studs. Hand-tighten the wing nuts. DO NOT OVERTIGHTEN.

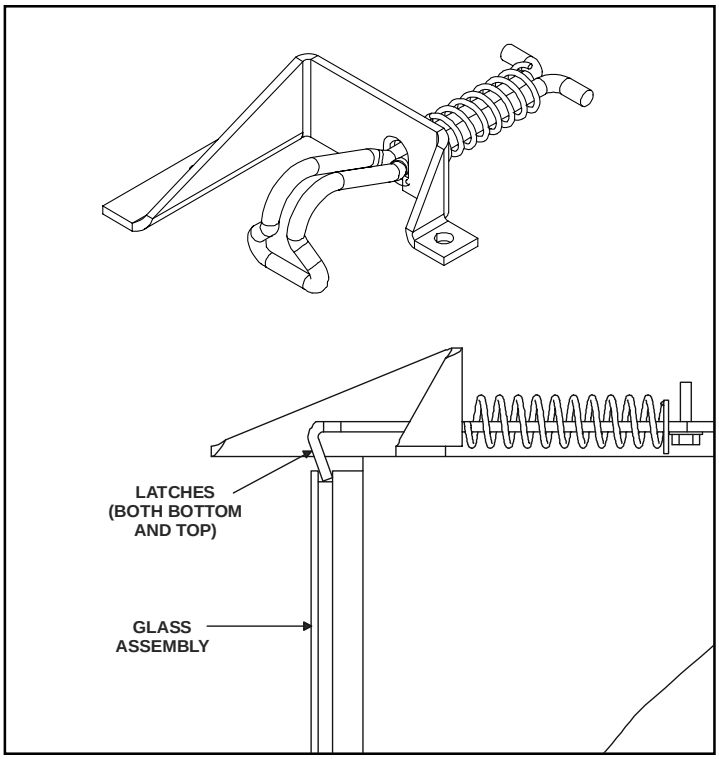

Figure 14. Glass Assembly

Remove any louvers, doors or decorative panels to access the glass latches. Pull the glass latches out of the groove on the glass frame by pulling them towards you. After replacement, reinstall glass latches, making sure the latch is seated firmly in the glass frame slot. Reinstall any trim door or louvers.

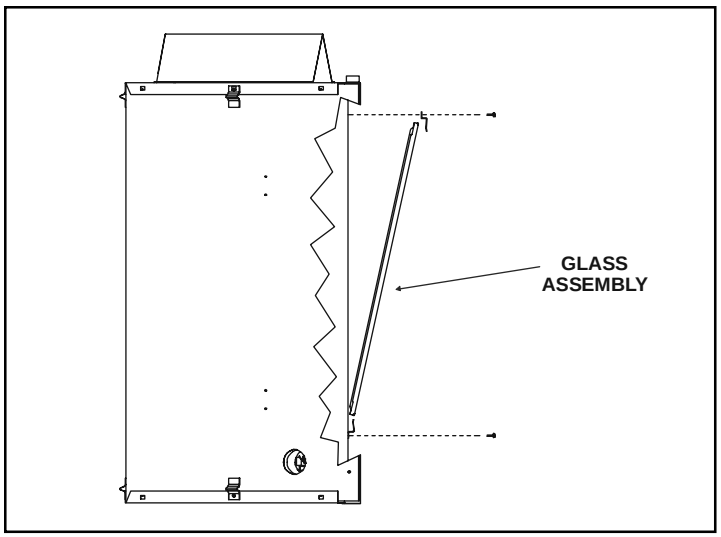

Figure 15. Glass Removal

Remove any door fronts. Use a phillips screwdriver to loosen and remove the top bracket before loosening the remaining screws and tilting the glass away from the unit. After replacement, set bottom of glass in the bottom bracket and press the top of glass against the unit. Replace the bracket and screws.

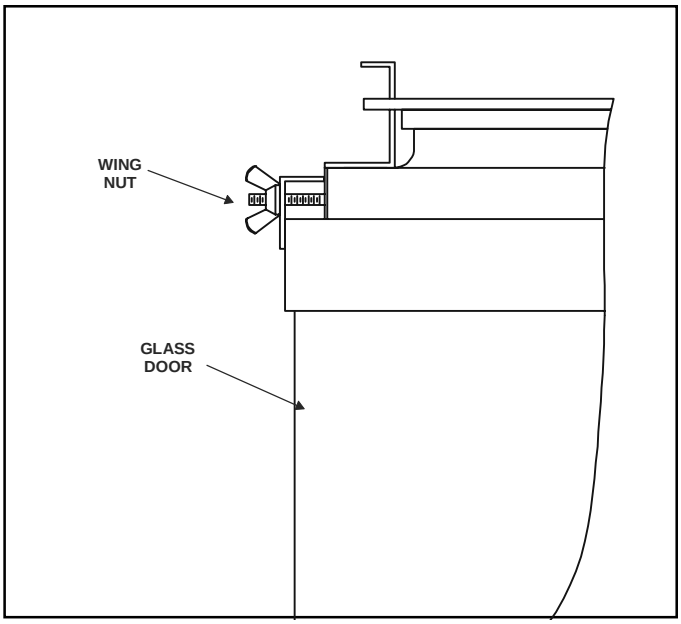

Figure 16.

Remove or lower any trim doors. Remove the wing nuts, glass clips and glass door. After replacement, replace the wing nuts and glass clip. Hand-tighten the wing nuts. DO NOT OVERTIGHTEN.

Standing Pilot Troubleshooting

Symptom	Possible Cause	Corrective Action
1. After repeated triggering of the red piezo button, the spark ignitor will not light the pilot.	a. Defective ignitor	Check the spark at the electrode and pilot. If no spark and electrode wire is properly connected, replace the ignitor.
	b. Defective pilot or misaligned electrode (spark at electrode)	Using a match, light the pilot. If the pilot lights, turn off the pilot and trigger the red piezo button again. If the pilot lights, an improper gas/air mixture caused the bad lighting and a longer purge period is recommended. If the pilot will not light, ensure that the gap at the electrode and pilot is one-eighth (1/8) inch to have a strong spark. If the gap is OK, replace the pilot.
	c. No gas or low gas pressure	Check the remote shut-off valves from the fireplace. Usually, there is a valve near the gas main. There can be more than one (1) valve between the fireplace and the main.
	d. No LP in the tank	Check the LP (propane) tank. You may be out of fuel.
2. The pilot will not stay lit after carefully following the lighting instructions.	a. Defective thermocouple	Check that the pilot flame impinges on the thermocouple. Clean and/or adjust the pilot for maximum flame impingement. Ensure that the thermocouple connection at the gas valve is fully inserted and tight (hand tighten plus 1/4 turn). Disconnect the thermocouple from the valve, place one millivolt meter lead wire on the tip of the thermocouple and the other meter lead wire on the thermocouple copper lead. Start the pilot and hold the valve knob in. If the millivolt reading is less than 15mV, replace the thermocouple.
	b. Defective valve	If thermocouple is producing more than 15 millivolts, replace faulty valve.
3. The pilot is burning, there is no gas burner, the valve knob is in the ON position, and the ON/OFF switch is in the ON position.	a. ON/OFF switch or wires defective	Check the ON/OFF switch and wires for proper connections. Place the jumper wires across the terminals at the switch. If the burner comes on, replace the defective switch. If the switch is OK, place the jumper wires across the switch wires at the gas valve. If the burner comes on, the wires are faulty or connections are bad.
	b. Thermopile may not be generating sufficient millivoltage	If the pilot flame is not close enough physically to the thermopile, adjust the pilot flame. Be sure the wire connections from the thermopile at the gas valve terminals are tight and that the thermopile is fully inserted into the pilot bracket.

4

Trouble-shooting

With proper installation, operation, and maintenance your gas fireplace will provide years of trouble-free service. If you do experience a problem, this troubleshooting guide will assist a qualified service person in the diagnosis of a problem and the corrective action to be taken. This troubleshooting guide can only be used by a qualified service technician.

Symptom	Possible Cause	Corrective Action
3. (Continued)		Check the thermopile with a millivolt meter. Take the reading at TH-TP&TP terminals of the gas valve. The meter should read 325 millivolts minimum, while holding the valve knob depressed in the pilot position, with the pilot lit, and the ON/OFF switch in the OFF position. Replace the faulty thermopile if the reading is below the specified minimum. With the pilot in the ON position, disconnect the thermopile leads from the valve. Take a reading at the thermopile leads. The reading should be 325 millivolts minimum. Replace the thermopile if the reading is below the minimum.
	c. Defective valve	Turn the valve knob to the ON position. Place the ON/OFF switch in the ON position. Check the millivolt meter at the thermopile terminals. The millivolt meter should read greater than 125mV If the reading is acceptable, and if the burner does not come on, replace the gas valve.
	d. Plugged burner orifice	Check the burner orifice for stoppage. Remove stoppage.
	e. Wall switch or wires are defective	Follow the corrective action in Symptom and Possible Cause 1. a. above. Check the switch and wiring. Replace where defective.
	f. High limit switch is defective or has reached its maximum temperature	Allow the unit to cool. If the burner remains lit after the fireplace warms up, the switch is good. If the corrective action for Symptom 1. above does not result in ignition, or if the fireplace continues to shut off, disconnect the limit switch wire from the gas valve and repeat the lighting instructions. If the pilot and the burner remain lit after the fireplace warms up, replace the limit switch. Do not use the fireplace until the high limit switch is replaced and properly wired.
4. Frequent pilot outage problem.	a. Pilot flame may be too high or too low, or blowing (high), causing pilot safety to drop out	Clean and adjust the pilot flame for maximum flame impingement on thermocouple. Follow lighting instructions carefully.

Symptom	Possible Cause	Corrective Action
5. The pilot and main burner extinguish while in operation.	a. No LP in the tank	Check the LP (propane) tank. Refill the fuel tank.
	b. Inner vent pipe leaking exhaust gases back into the system	Check for gas leaks.
	c. Horizontal vent improperly pitched	The horizontal vent cap should slope down only enough to prevent any water from entering the unit. The maximum downward slope is 1/4 inch.
	d. Glass too loose and air tight packet leaks in corners after usage	Tighten the corner.
	e. Bad thermopile or thermocouple	Replace if necessary.
	f. Improper vent cap installation	Check for proper installation and freedom from debris or blockage.
6. Glass soots.	a. Flame impingement	Adjust the log set so that the flame does not excessively impinge on it.
	b. Improper venturi setting	Adjust the air shutter at the base of the burner.
	c. Debris around venturi	Inspect the opening at the base of the burner. NO MATERIAL SHOULD BE PLACED IN THIS OPENING.
7. Flame burns blue and lifts off burner.	a. Insufficient oxygen being supplied	Ensure that the vent cap is installed properly and free of debris. Ensure that the vent system joints are tight and have no leaks. Ensure that no debris has been placed in the area at the base of, or in the area of, the air holes in the center of the base pan beneath the burner. Ensure that the glass is tightened properly on the unit, particularly on top corners.

DSI Troubleshooting

Symptom	Possible Cause	Corrective Action
1. The main burner does not light.	a. Unit junction box not electrically grounded or properly connected	Ensure that 110 VAC is connected. Ensure that 110 VAC supply is properly grounded in the junction box.
	b. No fuel supply	Ensure that gas shut off is turned on. Ensure that the fuel supply is properly connected.
	c. Air in gas line	Purge gas line of air.
2. The main burner extinguishes while in operation.	a. No fuel supply	Check fuel supply and connections to LP tank.
	b. Loose wire connection on module or valve	Check wire connections
	c. High temperature limit switch where applicable	Replace High temperature limit switch.
	d. Flame does not engulf flame sensor	Check location of sensor.
	e. Glass too loose and air tight gasket leaks in corners after usage	Check that glass latches are properly engaged. Remove glass, inspect corners and tighten gasket if applicable.
	f. Inner vent pipe leaking exhaust gases back into system	Check for leaks.
	g. Improper vent cap installation	Check for proper installation and freedom from debris or blockage.
3. The glass soots.	a. Improper venturi setting	Adjust the air shutter at the base of the burner.
	b. Too much flame impingement on the log	Check for proper log placement.
	c. Glass too loose and air tight gasket leaks in corners after usage	Check that glass latches are properly engaged. Remove glass, inspect corners and tighten gasket if applicable.
4. The flame burns blue and lifts off the burner.	a. Insufficient oxygen being supplied	Ensure the vent cap is installed properly and free of debris. Ensure that the inner vent pipe has no leaks in it. Ensure that the glass is tightened properly on the unit, particularly on the top corners.

IPI Troubleshooting

Symptom	Possible Cause	Corrective Action
1. Nothing happens when ON/OFF switch is turned on (pilot does not spark).	a. Low voltage/or bad lead wires.	Check voltage on AC terminals of module: should read 2.8 to 3.2 VAC. Check and/or replace batteries. Confirm that wire connections are secure.
	b. Faulty pilot device.	Gap between electrode and pilot hood should be approx. 3/16”. Check pilot for damage (cracked insulator on spark electrode, etc.).
	c. Faulty igniter wire.	Check wire for cracked casing, cuts, shorts, etc.
2. The main burner does not light and the igniter is sparking.	a. Loose sensor or spark wire.	Ensure spark and senor wires are connected.
	b. No fuel supply.	Ensure that gas shut off is turned on. Ensure the fuel supply is properly connected.
	c. Air in gas line.	Purge gas line of air.
	d. Loose orange wire to valve.	Connect wire to orange terminal on valve.
	e. Black controller wire not connected to ground.	Connect black wire to ground.
	f. Flame sensor not in pilot flame.	Determine cause of improper flame on the sensor, replace if necessary.
	g. Loose green wire to valve.	Connect green wire to valve.
	h. Low voltage.	Test voltage at battery terminals (red and black wires). If it is not at least 2.7 VAC, find source of low voltage problem (replace batteries or 3V adapter.)
	I. Faulty module or valve.	Check all wire connections including the ground wire. If OK then remove green wire from valve with the pilot lit. Connect a wire from red battery connection (red wire) to green terminal of valve. If valve opens and burner lights, replace the module. If it does not, replace the valve.
3. Pilot stays lit (should turn off when ON/OFF is turned off).	a. Loose connection on green wire.	Check connection of green wire to green terminal on valve.
	b. Faulty valve.	Disconnect orange wire on valve. If the pilot remains lit replace faulty valve.
	c. Faulty module.	Disconnect orange wire on valve. If the pilot turns off then check all connections and continuity - if no fault is found in wiring then replace faulty module.

Symptom	Possible Cause	Corrective Action
4. The main burner extinguishes while in operation.	a. No fuel supply	Check fuel supply and connections to LP tank.
	b. Loose wire connection on module or valve	Check wire connections
	c. High temperature limit switch where applicable	Replace high temperature limit switch.
	d. Flame does not engulf flame sensor	Check location of sensor.
	e. Glass too loose and air tight gasket leaks in corners after usage	Remove glass, inspect corners and tighten gasket if applicable.
	f. Inner vent pipe leaking exhaust gases back into system	Check for leaks.
	g. Improper vent cap installation	Check for proper installation and freedom from debris or blockage.
5. The glass soots.	a. Improper venturi setting	Adjust the air shutter at the base of the burner.
	b. Too much flame impingement on the log	Check for proper log placement.
6. The flame burns blue and lifts off the burner.	a. Insufficient oxygen being supplied	Ensure the vent cap is installed properly and free of debris. Ensure that the inner vent pipe has no leaks in it. Ensure that the glass is tightened properly on the unit, particularly on the top corners.

If Your Fireplace Has Standing Pilot Ignition

Appliance Requirements

- This appliance **DOES NOT** require 110-120 VAC to operate.

WARNING: DO NOT CONNECT 110-120 VAC TO THE GAS CONTROL VALVE OR THE APPLIANCE WILL MALFUNCTION AND THE VALVE WILL BE DESTROYED.

Optional Accessories

Optional fan and remote control kits require that 110-120 VAC be wired to the factory installed junction box before the fireplace is permanently installed.

NOTE *ELECTRICAL WIRING MUST BE INSTALLED BY A LICENSED ELECTRICIAN.*

CAUTION ***DISCONNECT REMOTE CONTROLS IF ABSENT FOR EXTENDED TIME PERIODS TO PREVENT ACCIDENTAL FIREPLACE OPERATION.***

Wall Switch

Position the wall switch in the desired position on a wall. Run a maximum of 25 feet (7.8 m) or less length of 18 A.W.G. minimum wire and connect it to the fireplace ON/OFF switch pigtails. **DO NOT CONNECT 110-120 VAC TO THE WALL SWITCH OR THE CONTROL VALVE WILL BE DESTROYED.**

CAUTION

LABEL ALL WIRES PRIOR TO DISCONNECTION WHEN SERVICING CONTROLS. WIRING ERRORS CAN CAUSE IMPROPER AND DANGEROUS OPERATION. VERIFY PROPER OPERATION AFTER SERVICING

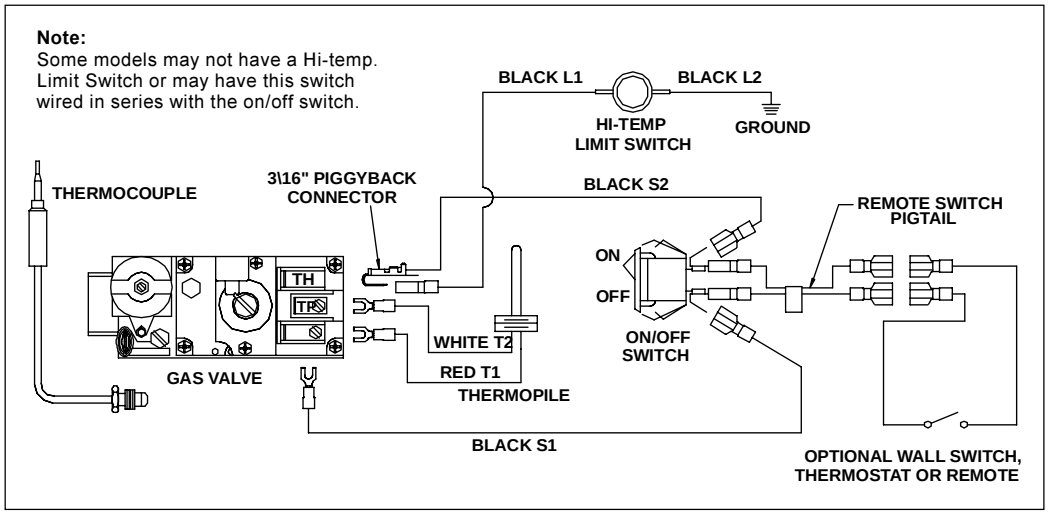

Figure 17. Standing Pilot Ignition Wiring Diagram

If Your Fireplace Has Direct Spark Ignition (DSI)

Appliance Requirements

This appliance requires that 110-120 VAC be wired to the factory installed junction box. Maintain correct polarity when wiring the junction box.

NOTE

ELECTRICAL WIRING MUST BE INSTALLED BY A LICENSED ELECTRICIAN.

Optional Accessories

Optional fan and remote control kits require that 110-120 VAC be wired to the fireplace junction box.

CAUTION

DISCONNECT REMOTE CONTROLS IF ABSENT FOR EXTENDED TIME PERIODS TO PREVENT ACCIDENTAL FIREPLACE OPERATION.

Wall Switch

Position the wall switch in the desired position on a wall. Run a maximum of 25 feet (7.8 m) or less of 16 A.W.G. minimum Romex wire and connect it to the fireplace ON/OFF switch pigtails.

CAUTION

LABEL ALL WIRES PRIOR TO DISCONNECTION WHEN SERVICING CONTROLS. WIRING ERRORS CAN CAUSE IMPROPER AND DANGEROUS OPERATION. VERIFY PROPER OPERATION AFTER SERVICING.

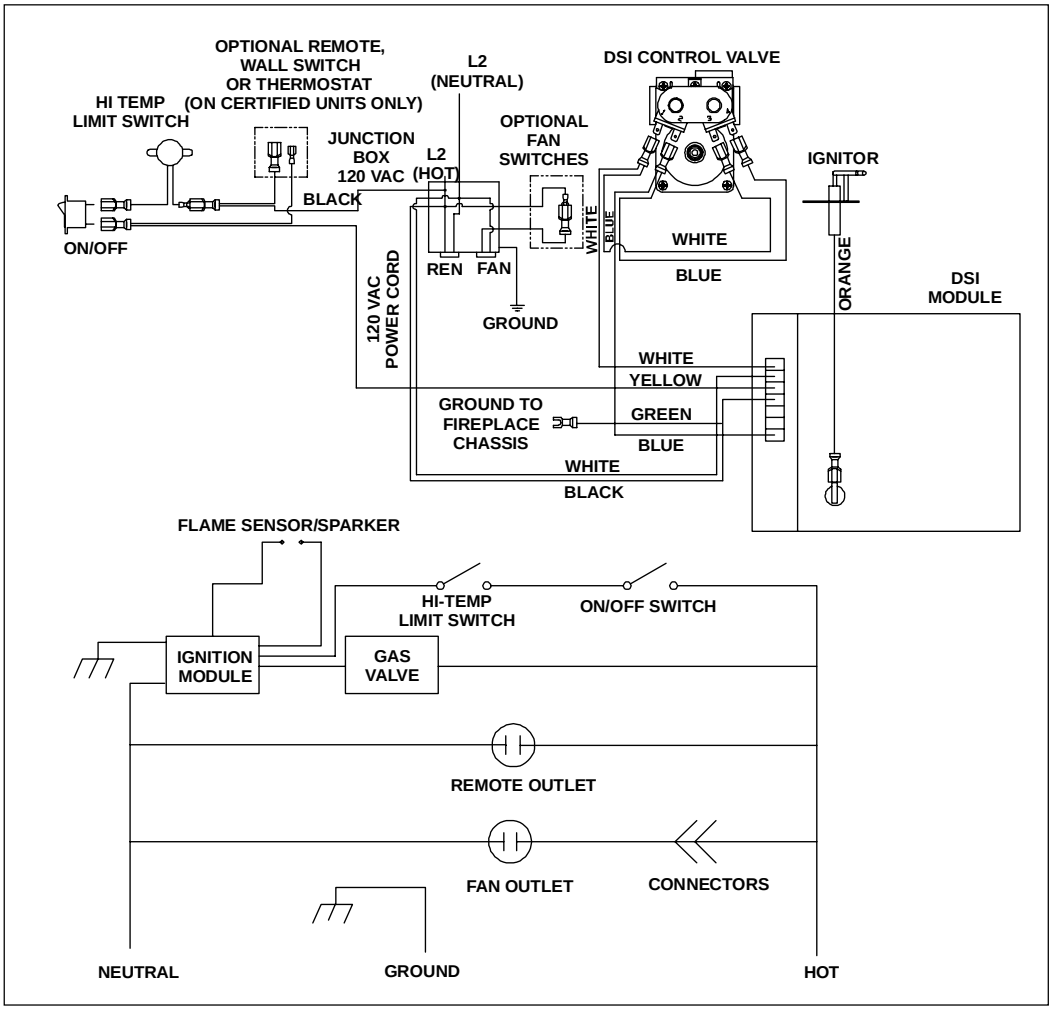

Figure 18. Direct Spark Ignition (DSI) Wiring Diagram

If Your Fireplace Has Intermittent Pilot Ignition (IPI)

Appliance Requirements

This appliance requires that 110-120 VAC be wired to the factory installed junction box. Maintain correct polarity when wiring the junction box.

NOTE

ELECTRICAL WIRING MUST BE INSTALLED BY A LICENSED ELECTRICIAN.

Optional Accessories

Remote control kits require that 110-120 VAC be wired to the fireplace junction box.

CAUTION

DISCONNECT REMOTE CONTROLS IF ABSENT FOR EXTENDED TIME PERIODS TO PREVENT ACCIDENTAL FIREPLACE OPERATION.

Wall Switch

Position the wall switch in the desired position on a wall. Run a maximum of 25 feet (7.8 m) or less of 16 A.W.G. minimum Romex wire and connect it to the fireplace ON/OFF switch pigtails.

CAUTION

LABEL ALL WIRES PRIOR TO DISCONNECTION WHEN SERVICING CONTROLS. WIRING ERRORS CAN CAUSE IMPROPER AND DANGEROUS OPERATION. VERIFY PROPER OPERATION AFTER SERVICING.

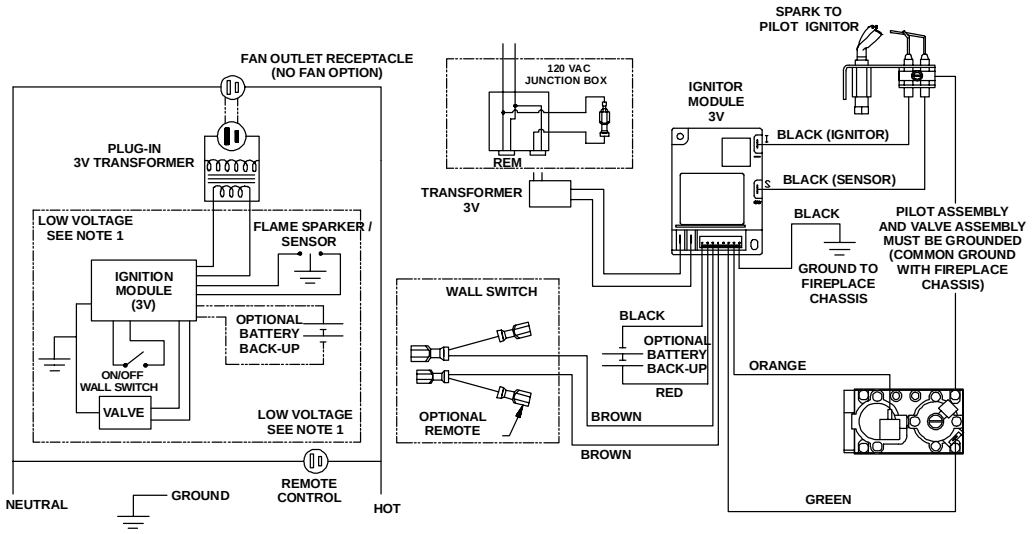

NOTE 1: Ignition module, valve, pilot and wall switch operate on 3 volts. 120 VAC is required at junction box unless equipped with battery back-up.

Figure 19. Intermittent Pilot Ignition (IPI) Wiring Diagram

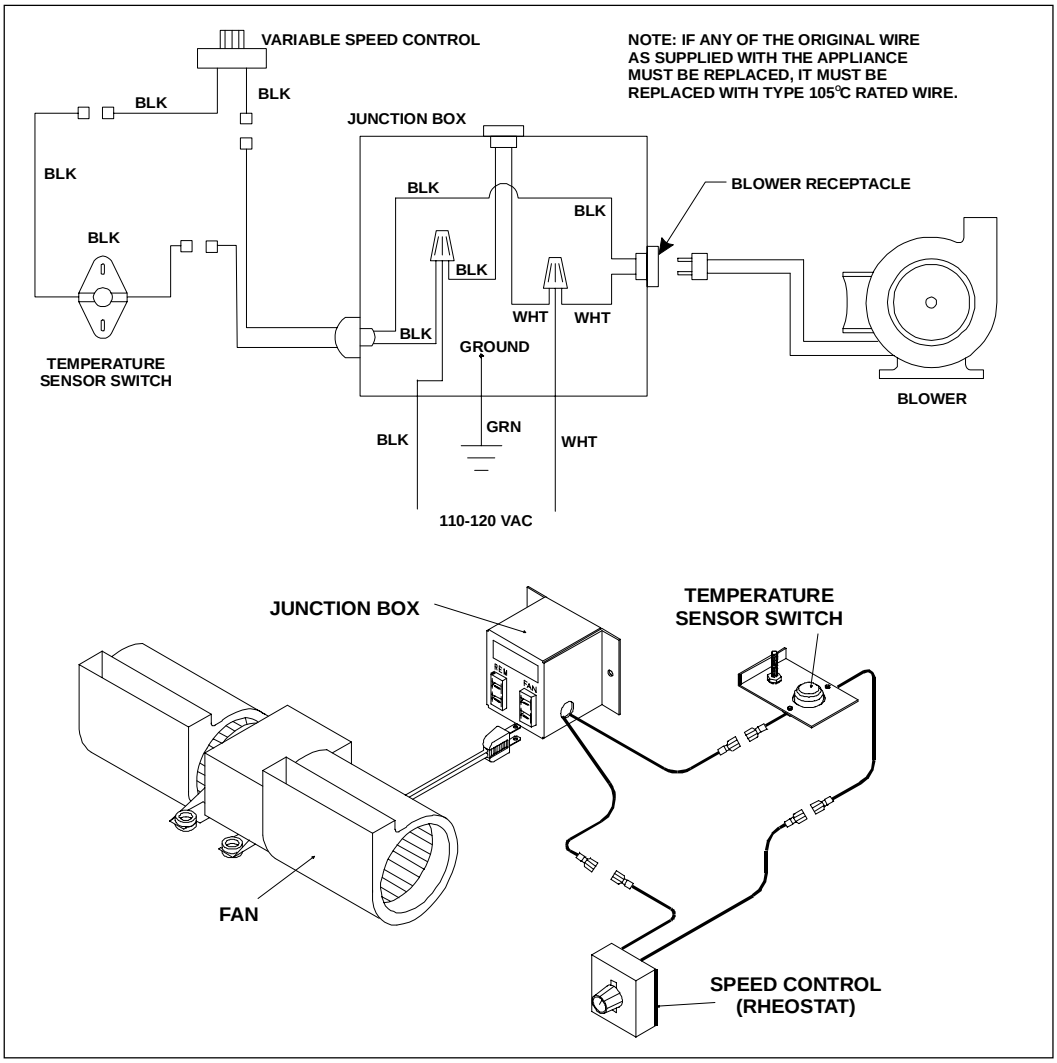

Figure 20. Fan Wiring Diagram

6

Replacement Parts and Accessories

Replacement Parts and Optional Accessories for your gas fireplace can be obtained from the nearest authorized Heat-N-Glo dealer. These parts are shown in the *Installers Guide* accompanying your fireplace.

Most Heat-N-Glo models have the following accessories available:

- Fans
- Trim kit
- Surrounds
- Remote controls
- Wall switch

Consult your local Heat-N-Glo dealer for specific options on your fireplace.